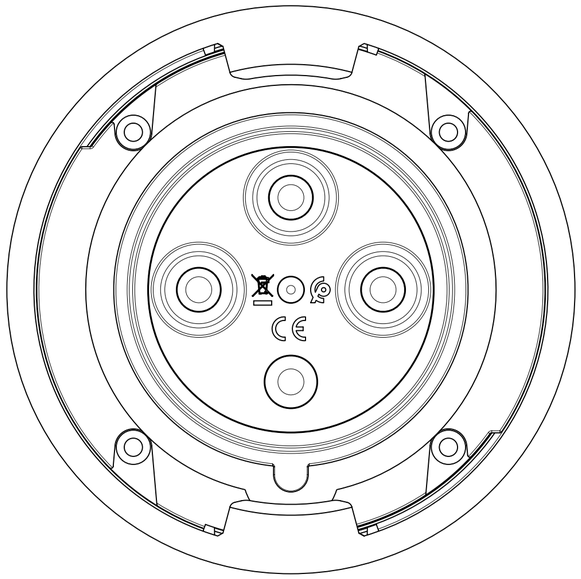

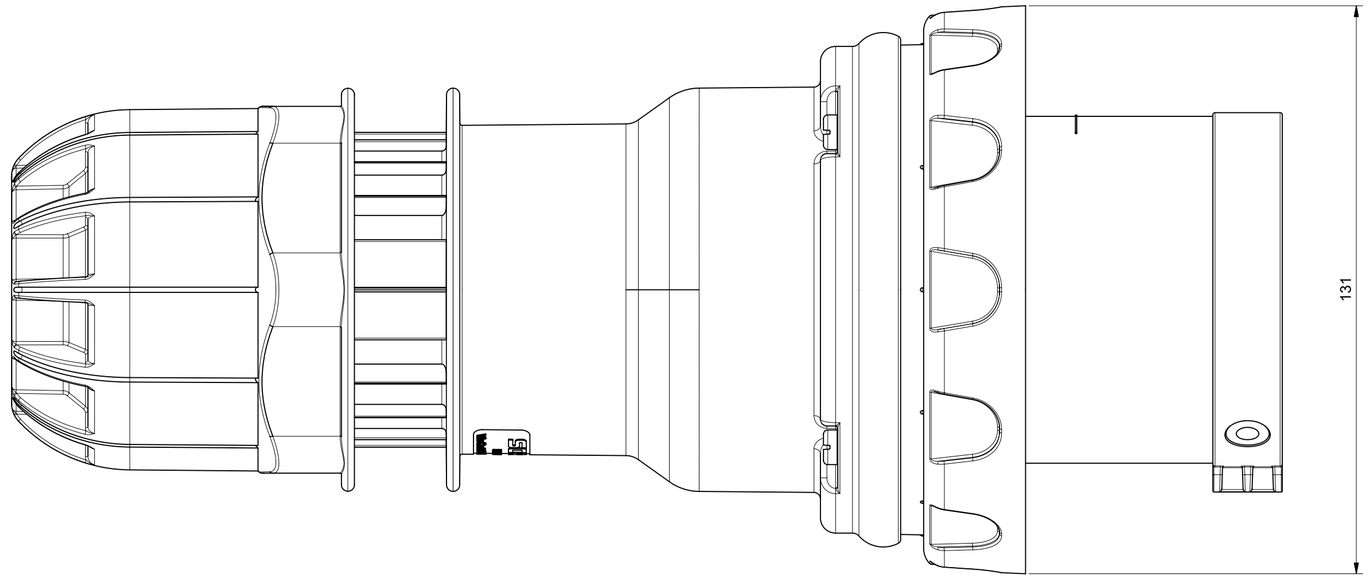

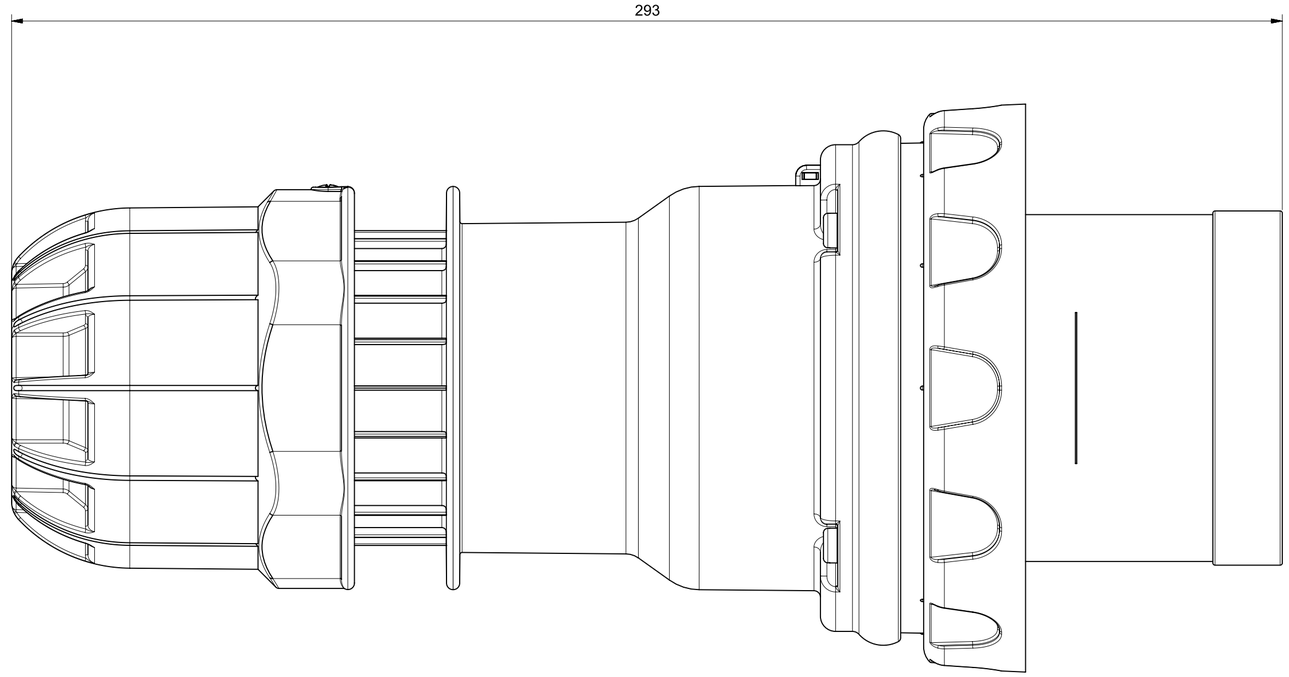

Under the terms of the law we reserve the ownership of this design may not be copied and transfer it to third parties or competitors

Format	A2	Scale	1:1	Mould N°		Drawn	SCAME
Tolerances for linear and angular dimensions without indication of specific tolerances: JS13 / UNI 286-1:2010						Date	
						Approved	
SCAME PARRE S.p.A.	DESCRIPTION					CODE	Sheet 1 / 1
	SPINA VOLANTE 3P+T 125 A IP67					4001200	